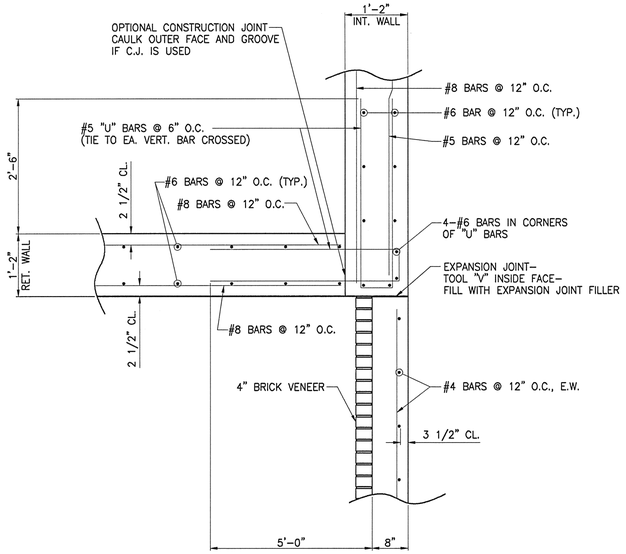

5 S-7 **PLAN DETAIL AT INT. OF RET. WALL AND FDN. WALL**

SCALE: 3/4" = 1'-0"

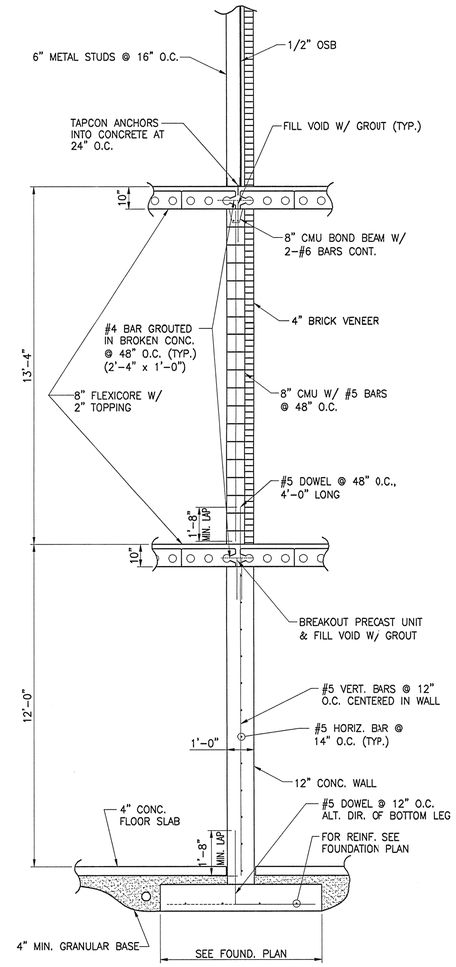

1 S-7 **NON-BRG. WALL SECTION**

SCALE: 3/8" = 1'-0"

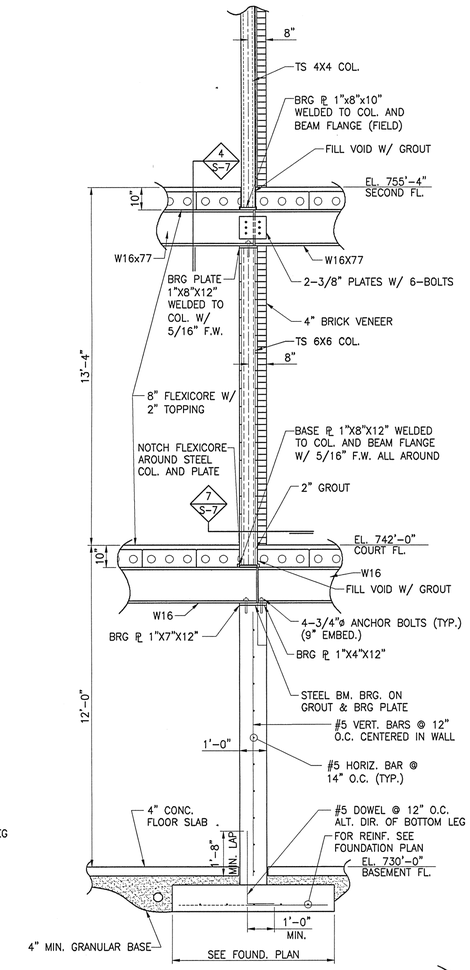

2 S-7 **SECTION THRU BEAM BEARING AND COLUMN**

SCALE: 3/8" = 1'-0"

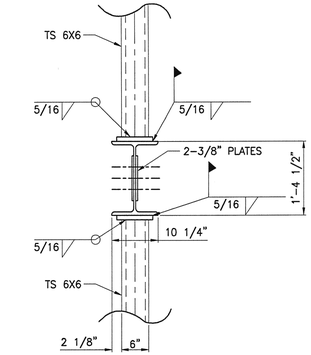

4 S-7 **SECTION**

SCALE: 3/4" = 1'-0"

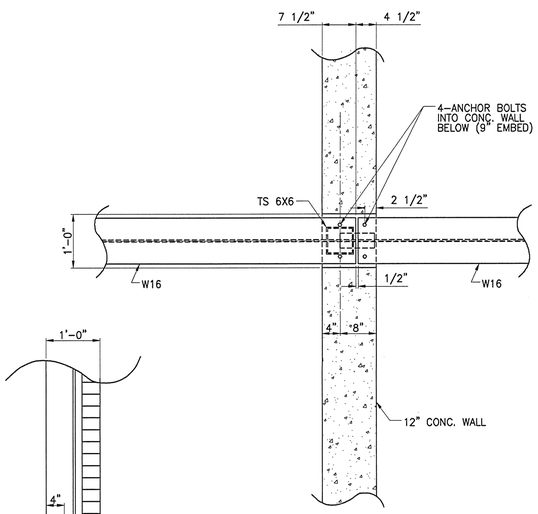

7 S-7 **SECTION**

SCALE: 3/4" = 1'-0"

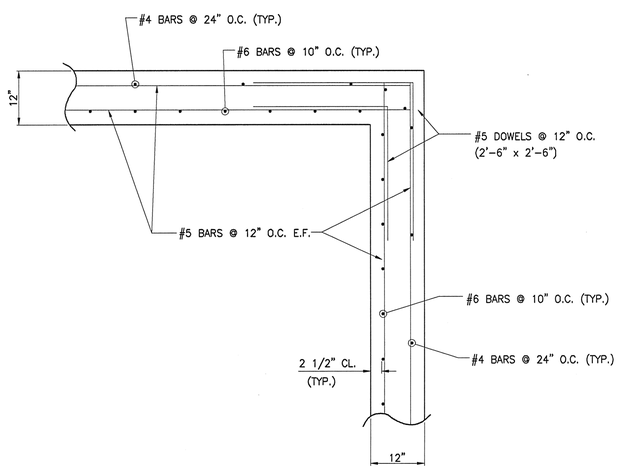

6 S-7 **DETAIL AT BELOW GRADE CONCRETE WALL CORNER**

SCALE: 3/4" = 1'-0"

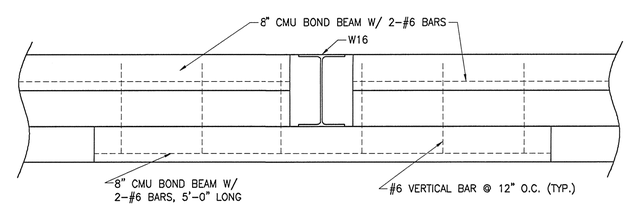

3 S-7 **STEPPED BOND BEAM ELEVATION**

SCALE: 3/4" = 1'-0"

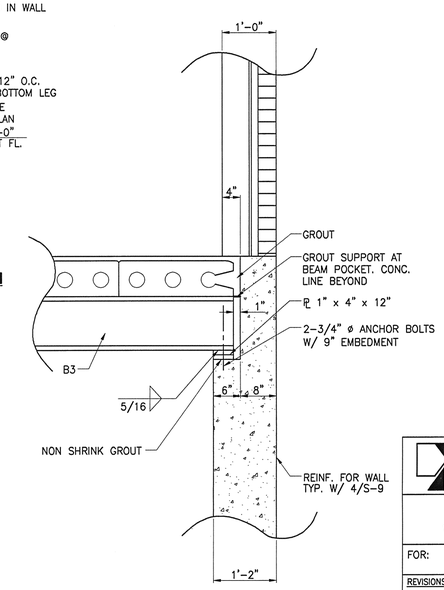

8 S-7 **TYP. BEAM POCKET DETAIL**

SCALE: 3/4" = 1'-0"

MAURER ▲ STUTZ, INC.
ENGINEERS SURVEYORS
7615 NORTH HARKER DRIVE
PEORIA, ILLINOIS 61615
PH. (309) 693-7615
FAX (309) 693-7616

HERITAGE SQUARE WALL AND BEAM DETAILS

FOR: **PEORIA CONSTRUCTION CO.**

REVISIONS			
	DATE 6/14/04	PROJECT NO. 233-04032	
	DESIGNED KEF		
	CHECKED LVT	DRAWING NO. S-7	
	DRAWN BRW		
FIELD BK.	CHECKED DLM	SHEET _ OF _	

S:\233\233040321\WS DETAIL 3.DWG